Decoder

1:2 Decoder

Input	Output	
A	D_0	D_1
0	1	0
1	0	1

$$D_0 = \bar{A}$$

$$D_1 = A$$

Decoder

2:4 Decoder

Input		Output			
A	B	D_0	D_1	D_2	D_3
0	0	1	0	0	0
0	1	0	1	0	0
1	0	0	0	1	0
1	1	0	0	0	1

$$D_0 = \bar{A}\bar{B}$$

$$D_1 = \bar{A}B$$

$$D_2 = A\bar{B}$$

$$D_3 = AB$$

Decoder

3:8 Decoder

Input			Output							
A	B	C	D_0	D_1	D_2	D_3	D_4	D_5	D_6	D_7
0	0	0	1	0	0	0	0	0	0	0
0	0	1	0	1	0	0	0	0	0	0
0	1	0	0	0	1	0	0	0	0	0
0	1	1	0	0	0	1	0	0	0	0
1	0	0	0	0	0	0	1	0	0	0
1	0	1	0	0	0	0	0	1	0	0
1	1	0	0	0	0	0	0	0	1	0
1	1	1	0	0	0	0	0	0	0	1

$$D_0 = \bar{A}\bar{B}\bar{C}$$
$$D_1 = \bar{A}\bar{B}C$$
$$D_2 = \bar{A}B\bar{C}$$
$$D_3 = \bar{A}BC$$
$$D_4 = A\bar{B}\bar{C}$$
$$D_5 = A\bar{B}C$$
$$D_6 = AB\bar{C}$$
$$D_7 = ABC$$

Encoder

2:1 Encoder

Input		Output
D_0	D_1	A
1	0	0
0	1	1

$$A = D_1$$

Encoder

4:2 Encoder

Input				Output	
D_0	D_1	D_2	D_3	A	B
1	0	0	0	0	0
0	1	0	0	0	1
0	0	1	0	1	0
0	0	0	1	1	1

$$A = D_2 + D_3$$

$$B = D_1 + D_3$$

Encoder

8:3 Encoder

Input								Output		
D_0	D_1	D_2	D_3	D_4	D_5	D_6	D_7	A	B	C
1	0	0	0	0	0	0	0	0	0	0
0	1	0	0	0	0	0	0	0	0	1
0	0	1	0	0	0	0	0	0	1	0
0	0	0	1	0	0	0	0	0	1	1
0	0	0	0	1	0	0	0	1	0	0
0	0	0	0	0	1	0	0	1	0	1
0	0	0	0	0	0	1	0	1	1	0
0	0	0	0	0	0	0	1	1	1	1

$$A = D_4 + D_5 + D_6 + D_7$$

$$B = D_2 + D_3 + D_6 + D_7$$

$$C = D_1 + D_3 + D_5 + D_7$$

Multiplexer

2:1 Multiplexer

Sel. lines	Output
S	Y
0	I_0
1	I_1

$$Y = I_0\bar{S} + I_1S$$

Input
I_0
I_1

Multiplexer

4:1 Multiplexer

Sel. Lines		Output
S_1	S_0	Y
0	0	I_0
0	1	I_1
1	0	I_2
1	1	I_3

Input
I_0
I_1
I_2
I_3

$$Y = I_0\overline{S_1}\,\overline{S_0} + I_1\overline{S_1}S_0 + I_2S_1\overline{S_0} + I_3S_1S_0$$

Multiplexer

8:1 Multiplexer

Sel. Lines			Output
S_2	S_1	S_0	Y
0	0	0	I_0
0	0	1	I_1
0	1	0	I_2
0	1	1	I_3
1	0	0	I_4
1	0	1	I_5
1	1	0	I_6
1	1	1	I_7

Input
I_0
I_1
I_2
I_3
I_4
I_5
I_6
I_7

$$Y = I_0\overline{S_2}\,\overline{S_1}\,\overline{S_0} + I_1\overline{S_2}\,\overline{S_1}S_0 + I_2\overline{S_2}S_1\overline{S_0} + I_3\overline{S_2}S_1S_0 + I_4S_2\overline{S_1}\,\overline{S_0} + I_5S_2\overline{S_1}S_0 + I_6S_2S_1\overline{S_0} + I_7S_2S_1S_0$$

Demultiplexer

1:2 Demultiplexer

Sel. Line	Output	
S	D_0	D_1
0	I	0
1	0	I

$$D_0 = I\bar{S}$$

$$D_1 = IS$$

Demultiplexer

1:4 Demultiplexer

Sel. Lines		Output			
A	B	D_0	D_1	D_2	D_3
0	0	I	0	0	0
0	1	0	I	0	0
1	0	0	0	I	0
1	1	0	0	0	I

$$D_0 = \bar{A}\bar{B}I$$

$$D_1 = \bar{A}BI$$

$$D_2 = A\bar{B}I$$

$$D_3 = ABI$$

Demultiplexer

1:8 Demultiplexer

Sel. Lines			Output							
A	B	C	D_0	D_1	D_2	D_3	D_4	D_5	D_6	D_7
0	0	0	1	0	0	0	0	0	0	0
0	0	1	0	1	0	0	0	0	0	0
0	1	0	0	0	1	0	0	0	0	0
0	1	1	0	0	0	1	0	0	0	0
1	0	0	0	0	0	0	1	0	0	0
1	0	1	0	0	0	0	0	1	0	0
1	1	0	0	0	0	0	0	0	1	0
1	1	1	0	0	0	0	0	0	0	1

$$D_0 = \bar{A}\bar{B}\bar{C}I$$
$$D_1 = \bar{A}\bar{B}CI$$
$$D_2 = \bar{A}B\bar{C}I$$
$$D_3 = \bar{A}BCI$$
$$D_4 = A\bar{B}\bar{C}I$$
$$D_5 = A\bar{B}CI$$
$$D_6 = AB\bar{C}I$$
$$D_7 = ABCI$$

4.6 BCD or Binary Coded Decimal

1. Convert Decimal Numbers to BCD:

Split each decimal digit into its 4-bit binary equivalent.

2. Align the BCD Numbers:

Make sure the rightmost digits (least significant) are aligned.

3. Perform Binary Addition:

Add each corresponding 4-bit group like you would with regular binary numbers. Remember to handle carries if the sum exceeds 9 (1001 in binary).

4. Check for Overflow and Correction:

If the sum of a group is greater than 9 (1001 in binary), it's an invalid BCD code. To correct it, add 6 (0110) to the sum. This will shift the result back into the valid BCD range (0000 to 1001).

5. Repeat Steps 3-4 for all Groups:

Continue adding and checking for overflow until all groups are processed.

4.6 BCD or Binary Coded Decimal

Truth table for Y

S_3S_2 \ S_1S_0	00	01	11	10
00	0	0	0	0
01	0	0	0	0
11	1	1	1	1
10	0	0	1	1

$$Y = S_3S_2 + S_3S_1$$

S_3	S_2	S_1	S_0	Y
0	0	0	0	0
0	0	0	1	0
0	0	1	0	0
0	0	1	1	0
0	1	0	0	0
0	1	0	1	0
0	1	1	0	0
0	1	1	1	0
1	0	0	0	0
1	0	0	1	0
1	0	1	0	1
1	0	1	1	1
1	1	0	0	1
1	1	0	1	1
1	1	1	0	1
1	1	1	1	1

Therefore, we should add 0110 for logic 1 for $S_3S_2 + S_3S_1 + C$

C stands for carry

4.6 BCD or Binary Coded Decimal

Truth table for Y

S_3S_2 \ S_1S_0	00	01	11	10
00	0	0	0	0
01	0	0	0	0
11	1	1	1	1
10	0	0	1	1

$$Y = S_3S_2 + S_3S_1$$

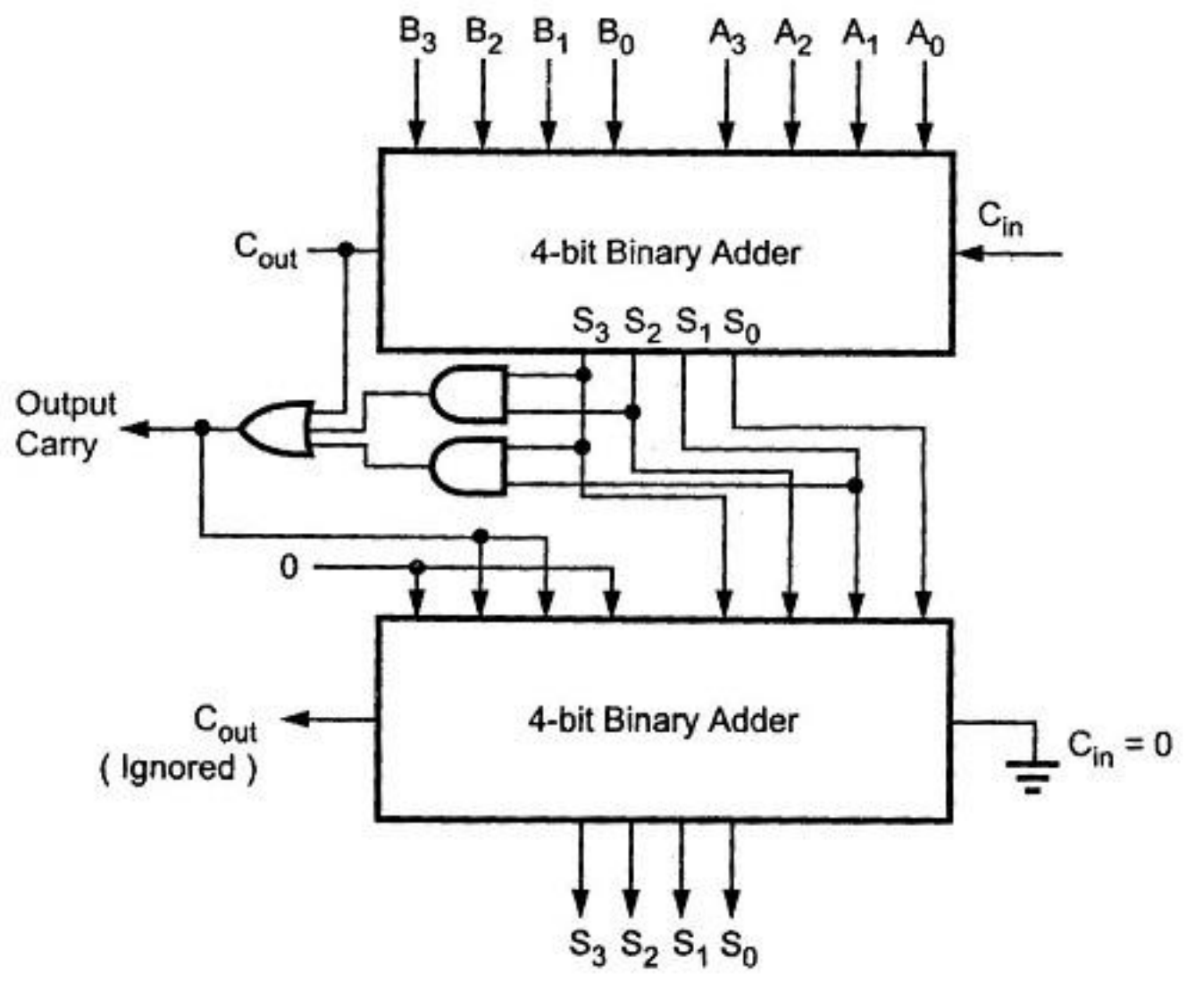

Read Only Memory (ROM)

- Data stored in a ROM is non-volatile
- i.e. Once written, this data is permanently stored until erased or changed through re-programming (if applicable)
- The ROM has n input lines for the address and m output data lines
- So, Total memory capacity of a ROM is 2^n x m bits
- ROMs do not have input lines as a write operation does not exist in them
- Programmable ROMs receive data to be programmed on the output lines
- Generally, system-level programs that need to be accessed frequently and at power up access are stored in the computer's ROM, e.g. the BIOS firmware

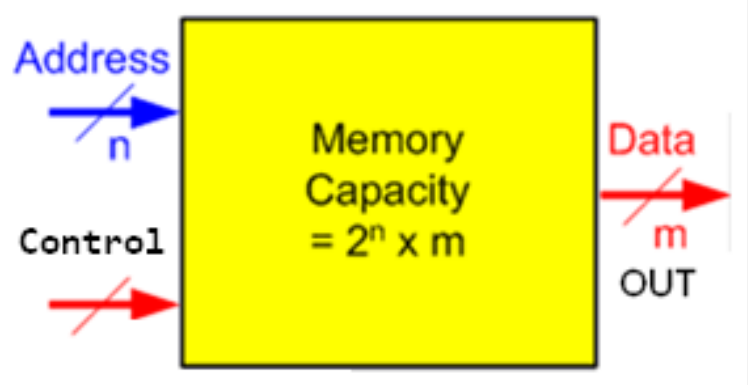

Read Only Memory (ROM)

- Example: 8 X 4 PROM (n = 3 input lines, m = 4 output lines)
- The fixed "AND" array is a "decoder" with 3 inputs and 8 outputs implementing minterms
- The programmable "OR" array uses a single line to represent all inputs to an OR gate. An "X" in the array corresponds to attaching the minterm to the OR
- Read Example: For input (A_2,A_1,A_0) = 010, output is (F_3,F_2,F_1,F_0) = 1001.
- What are functions F_3, F_2 , F_1 and F_0 in terms of (A_2, A_1, A_0)?

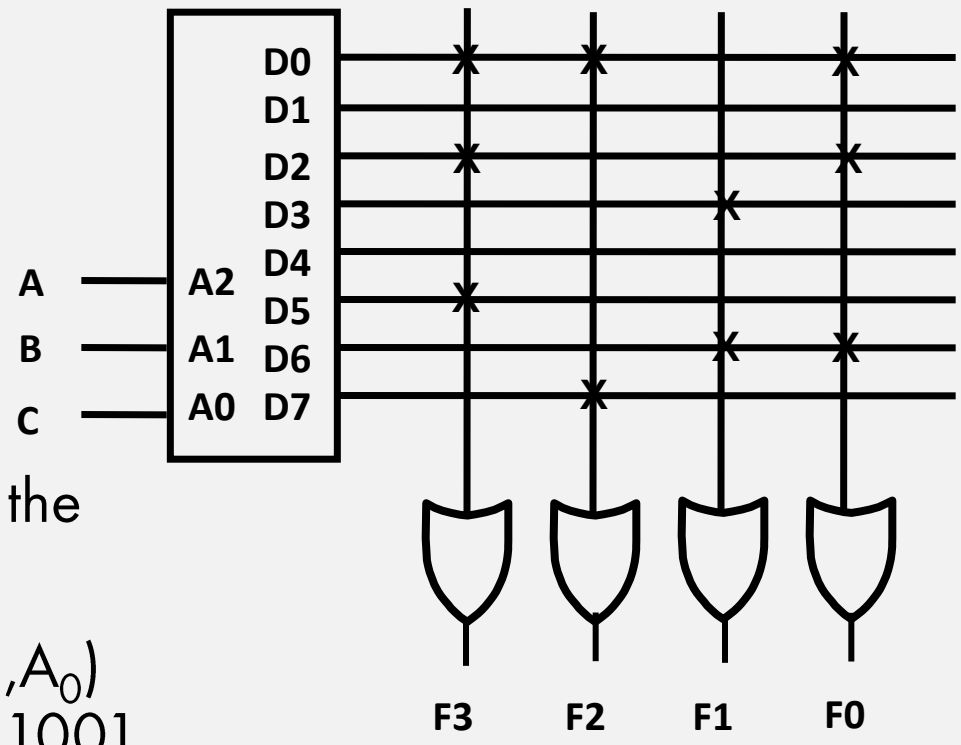

Programmable Array Logic
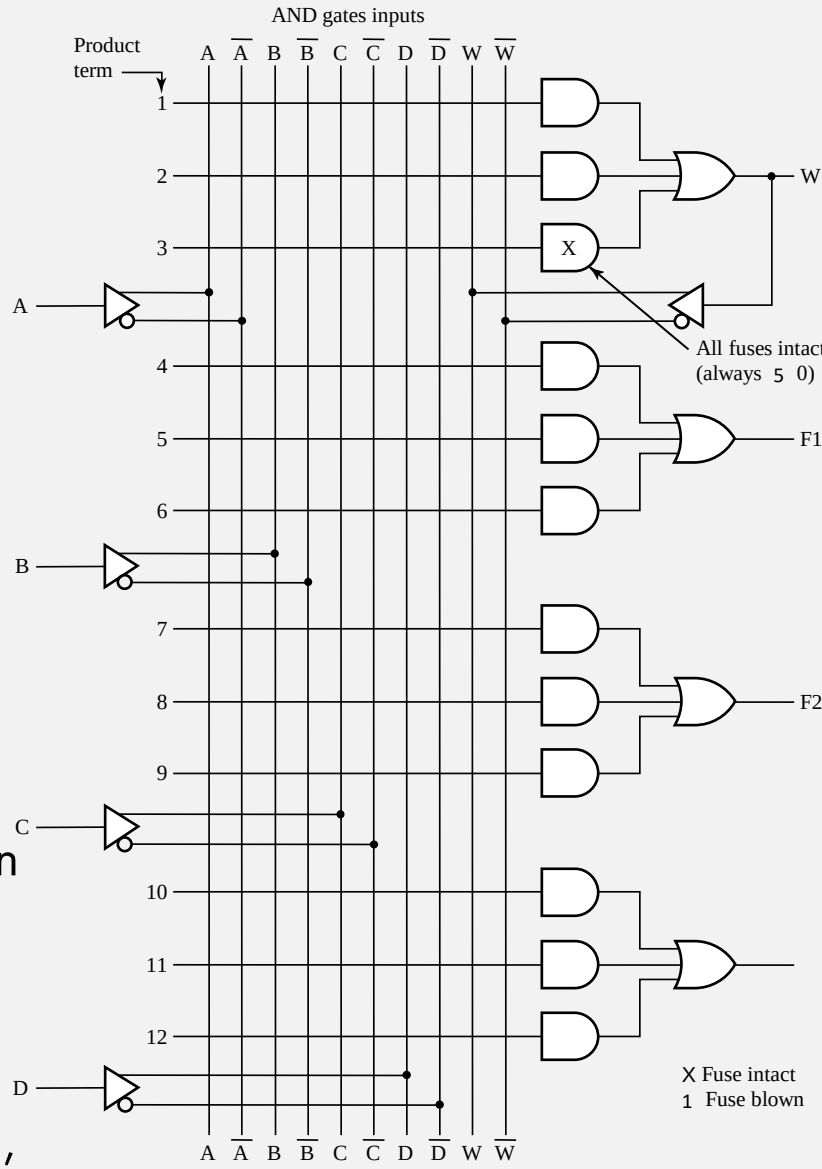
- Compared to ROMs, PLA is the most flexible economical device: having <u>programmable</u> ANDs, <u>programmable</u> ORs, and <u>programmable</u> output inversions
- Advantages
  - PLA can have large numbers of inputs N and outputs M, permitting implementation of optimized functions that are impractical for a ROM (because of the large number of inputs N required)
  - A PLA has all of its product terms available for connecting to all outputs, overcoming the problem of the limited number of inputs to each PAL OR
  - Any product can be shared by all output functions (sums)
  - Some PLAs have outputs that can be complemented, to give F expressions in terms of product of sum (POS) (inverted SOP of F)
- Disadvantage
  - Often the # of product terms limits the application of a PLA. Use two-level <u>multiple-output optimization</u> to reduce the number of product terms required, thus fitting it into the PLA.